ISSUE	AMENDMENT	DATE

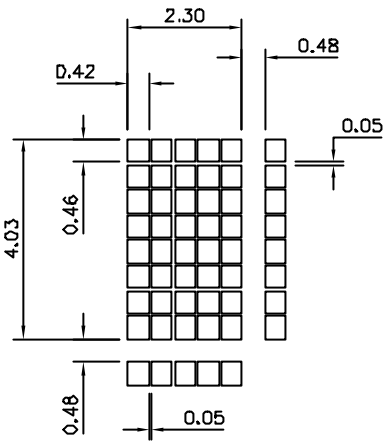

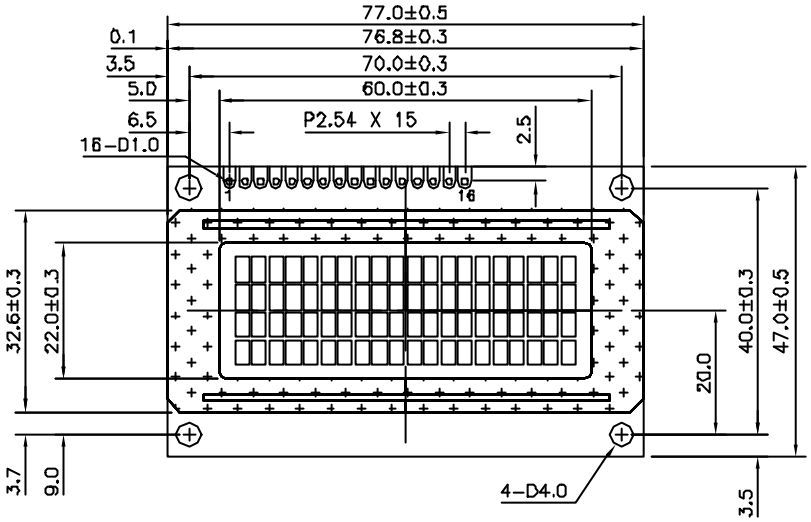

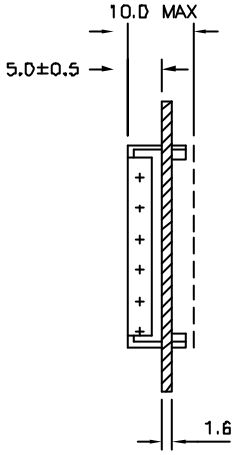

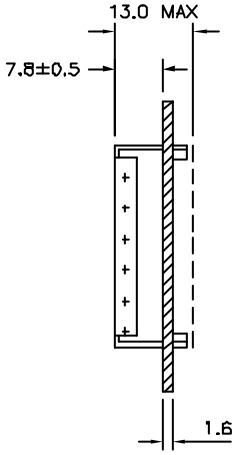

WITH LED04

14 PIN CONNECTION	1	2	3	4	5	6	7	8	9	10	11	12	13	14	A	K
16 PIN CONNECTION	1	2	3	4	5	6	7	8	9	10	11	12	13	14	15	16
	VSS	VDD	V0	RS	R/W	E	DB0	DB1	DB2	DB3	DB4	DB5	DB6	DB7	LED(+)	LED(-)

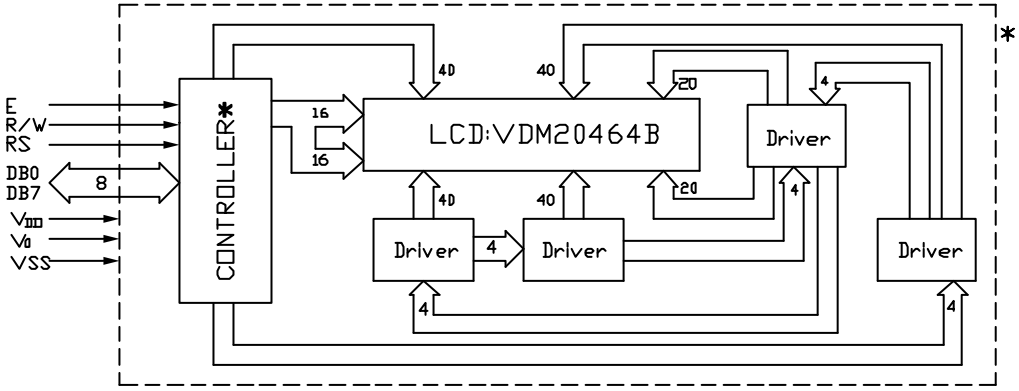

* SPLC780A1 OR EQUIVALENT

TITLE: SPECIFICATION OF MODULE

PROJECT NO: MDLS20464BSP

TOLERANCE UNLESS OTHERWISE SPECIFIED: X.X ±0.3, X.XX ±0.1

DIMENSIONS IN MM

MATERIAL:

FINISH:

SCALE: DO NOT ON SCALE

THICKNESS:

THIRD ANGLE PROJECTION

	NAME	SIGN	DATE
DRAWN	PAN WU		01.06.05
CHECKED	CHARM		
APPROVED	K.P. HO		

ITEM NO. MDLS20464BSP-XX

DESCRIPTION: MDLS20464BSP

FILE NO: MODULE MDLS20464BSP-XX REV 0

SHEET 1 OF 1

VARITRONIX LIMITED